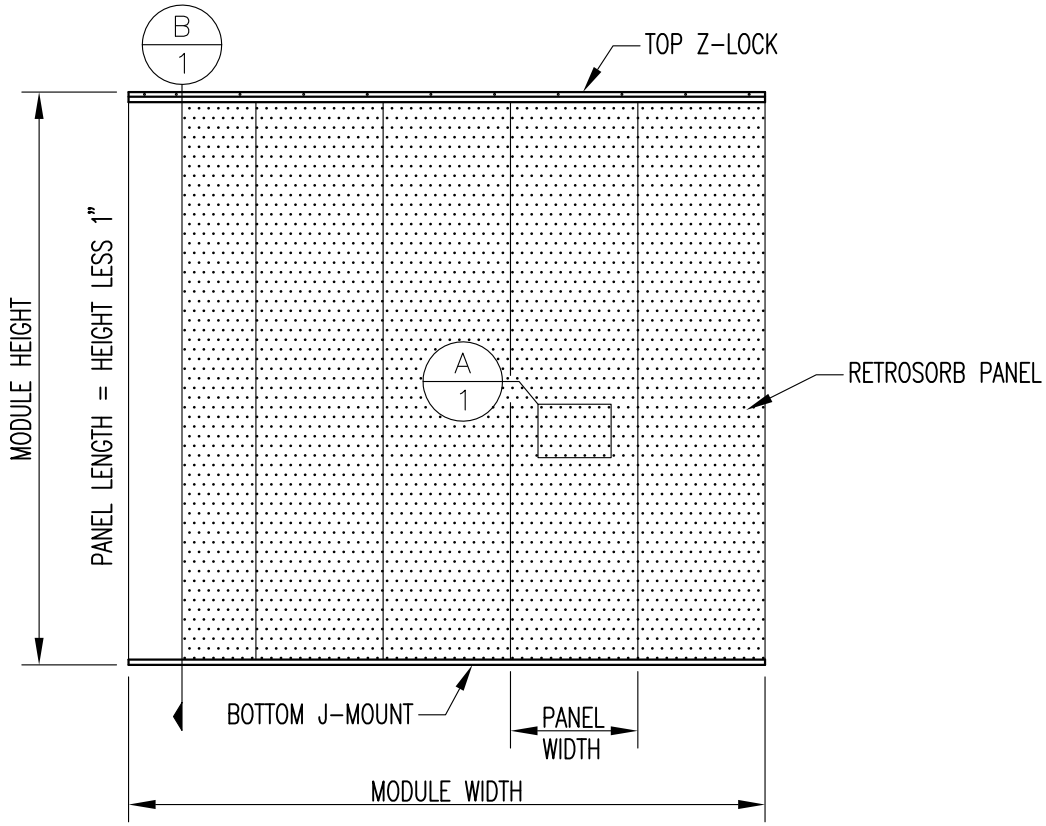

PANEL STANDARD SIZES

24" WIDE x UP TO 96"

PANEL MATERIAL

.032" SMOOTH ALUMINUM OR
22G SMOOTH STEEL

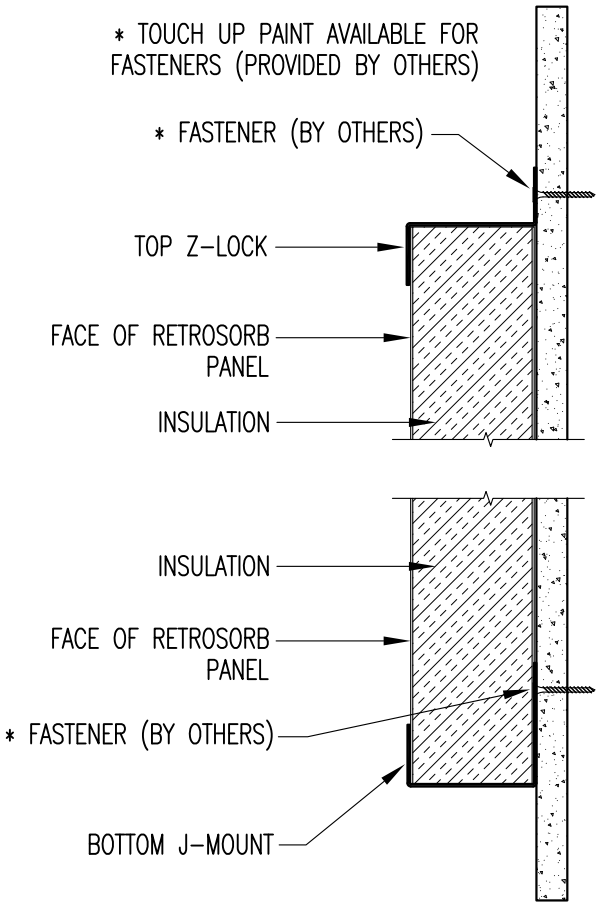

SECTION B

N.T.S.

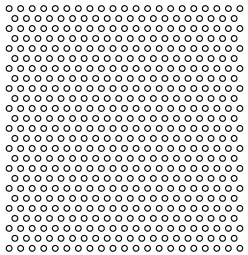

DETAIL A

3/32" DIA. HOLES ON 3/16" STAGGERED CENTERS
23% OPEN AREA

THIS DESIGN, DRAWING AND SPECIFICATION IS THE EXCLUSIVE PROPERTY OF SOUND FIGHTER SYSTEMS, LLC. IT AND/OR THE DESIGN THEREIN ARE NOT TO BE COPIED, SOLD, TRANSFERRED OR REPRODUCED IN ANY WAY AND IS SUBJECT TO RETURN ON DEMAND. THE ITEMS DESCRIBED ARE NOT TO BE BUILT OR ASSEMBLED OR IT'S DESIGN CRITERIA DISCLOSED TO OTHER PARTIES WITHOUT THE EXPRESSED WRITTEN PERMISSION OF SOUND FIGHTER SYSTEMS, LLC.

SOUND FIGHTER® SYSTEMS, LLC
P.O. Box 7216
Shreveport, Louisiana
71137-7216
TEL. 318-861-6640
FAX 318-865-7373
Website: www.soundfighter.com

RETROSORB WALL

GENERIC ELEVATION

DRAWN	DATE	SIZE	PROJECT	DWG NO	REV
KG	11/30/15	B	.	RETROSORB_WALL_GENERIC_ELEVATION.dwg	.
APPRV	DATE	SCALE N.T.S.		SHEET 1	